YLI ELECTRONIC

Electric Cabinet Lock

Model:YE-305

Specification

- Size: 64.1*40*25mm
- Voltage: DC12V
- Current:100mA
- Holding force: >150kg
- Weight: 0.18kg

Installation

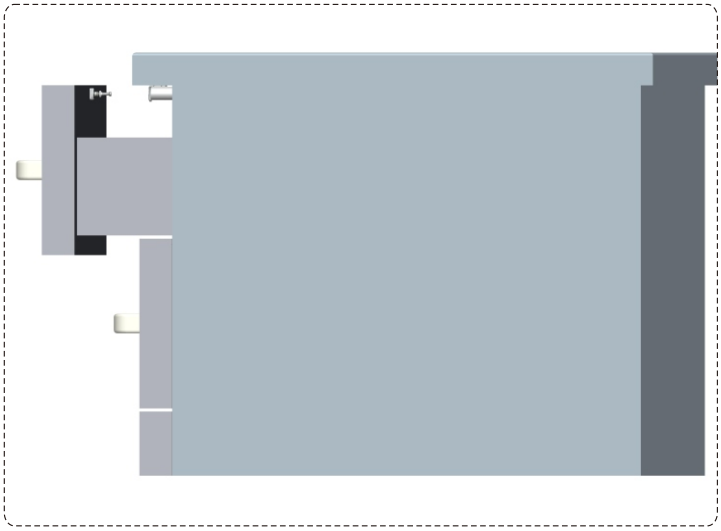
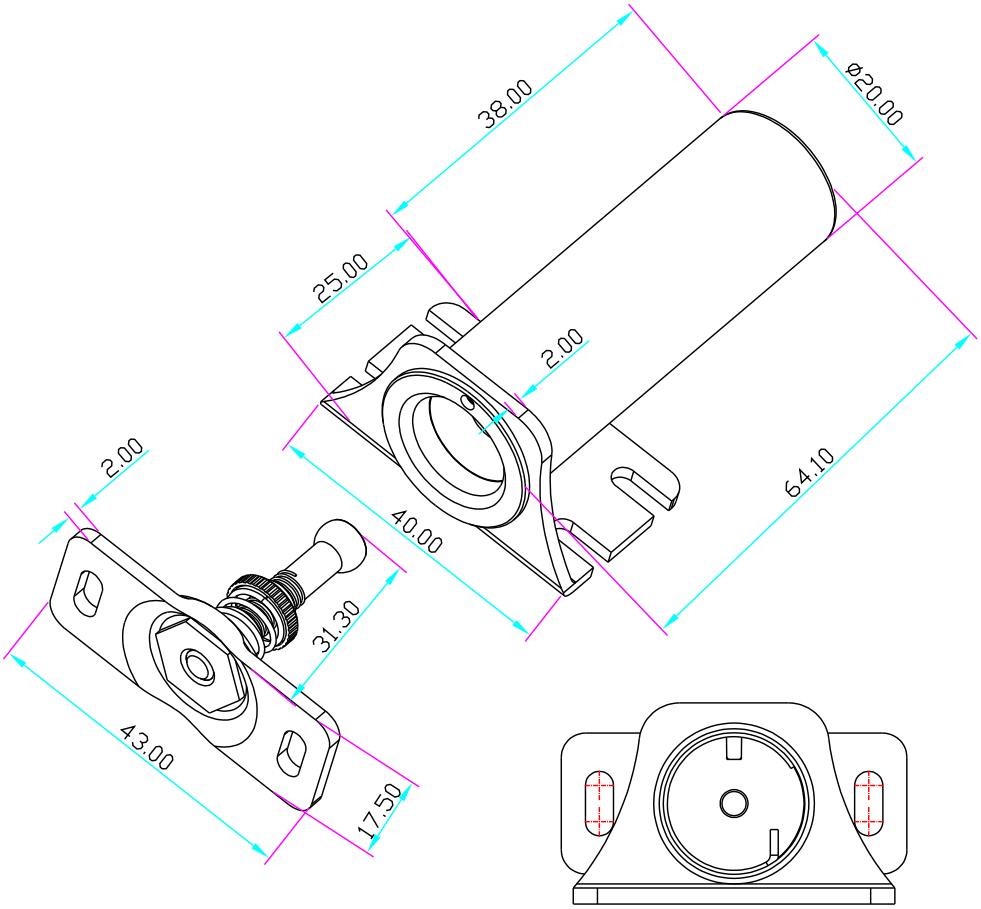
Installation